Protocols (cont.)

POP3	
POP3 Server:	0.0.0.0:110
POP3 Secure Connection (TLS):	Disabled
E-mail Address:	
NTP:	Enabled
FTP:	Passive
Web Services on Device:	Enabled

Apps

Printing

Banner Sheet:	Disabled
Error Sheets:	Enabled
Paper Substitution:	Enabled
Tray Priority:	1,2,3,4,5
PostScript	Installed
Level:	3
Version:	3021.101
PCL	
Version:	6
Font Name:	Courier
Custom Color Tables	Enabled
Label:	Not Installed
Embedded Fax:	not installed
Fax Line1:	
Fax Line2:	
Server Fax:	Enabled
Repository Protocol:	FTP
Repository Server:	10.61.23.93:21
Repository Document Path:	/
Workflow Scanning:	Enabled
Email:	Enabled
Scan to Mailbox:	Disabled
Storage Capacity (MB):	23489 MB
Storage Used (MB):	1319 MB
Cleanup of Public Folders:	Enabled
Cleanup of Created Folders:	Enabled
Cleanup Time:	Daily
Scan to Home:	Disabled
Scan To:	Enabled
Cloud Services:	Disabled
Print From:	Enabled
Saved Jobs for Reprint:	Enabled
Print From USB:	Enabled
Print From MailBox:	Disabled
Cloud Services:	Disabled

Accounting

Accounting Mode:	None
Network Accounting:	Disabled

Security

Authentication Configuration

Machine UI Authentication:	Locally on the Device
Home:	Unlocked
Jobs:	Unlocked
Device:	Unlocked
Device Website Authentication:	Locally on the Device
Authorization:	Locally on the Device
Retrieve E-mail from LDAP:	Enabled
Authentication Server:	Kerberos
Xerox Secure Access:	Disabled
Audit Log:	Enabled
IP Sec:	Disabled
IP Filtering:	Disabled
Security Certificates	
Machine Certificate:	Signed
Root Certificates Installed:	66
802.1x:	Disabled
Authentication Method:	EAP-MS-CHAPv2
Job Data Removal:	
Scheduled:	Disabled
FIPS 140-3:	Disabled
TLS:	TLS 1.1 and TLS 1.2
TLS Hash:	SHA-1, SHA-256 and above
Trellix Embedded Control:	Enhanced Security

Protocols (cont.)

Bonjour:	
Bonjour Printer Name:	Xerox AltaLink xxxxxx (AA:8B:9F)
HTTP:	Enabled
Port Number:	80
Force Traffic over Secure Connection (H...	Yes
Secure HTTP Port Number:	443
Proxy Server:	Automatic
Proxy Server Address:	0.0.0.0:8080
IPP	Enabled
Secure IPP Mode:	IPP and Secure IPPS
IPP Network Path:	http://10.61.12.168:631
SNMP	
SNMP v1/v2:	Enabled
SNMP v3:	Disabled
LPR/LPD:	Enabled
Port Number:	515
PDL Switching:	Disabled
PDL Banner Override:	Disabled
Raw IP Printing:	Enabled
Port Number 1:	9100
Bidirectional:	Disabled
End of Job Timeout:	300
PDL Switching:	Disabled
Port Number 2:	0
Port Number 3:	0
LDAP	
LDAP Server 1 Friendly Name:	
LDAP Server 1 Primary LDAP Address:	0.0.0.0:389
LDAP Server 1 Alternate LDAP Address:	0.0.0.0:389
LDAP Server 1 Search Directory Root:	
LDAP Server 1 Secure Connection (LDA...	Disabled
LDAP Server 1 Validate Server Certificate...	Disabled
SMTP	
SMTP Server:	10.61.23.93:25
Connect Encryption (TLS):	No Encryption
Validate Server Certificate (TLS):	
Max Message Size (KB):	10240
Number of Fragments:	1
Total Job Size (KB):	300000
Job Splitting Boundary:	Page Boundary
Credentials for Auto E-mails:	None
Credentials for Walkup User:	None
POP3	
POP3 Server:	0.0.0.0:110
POP3 Secure Connection (TLS):	Disabled
E-mail Address:	
Receipt of E-mail via POP3:	Disabled
Send Confirm on Request:	Enabled
Incoming E-mail cover sheet:	Enabled
NTP:	Enabled
Primary Server:	0.0.0.0:123
Alternate Server:	0.0.0.0:123
SLP:	Disabled
FTP:	Passive
Web Services on Device:	Enabled
WS-Discovery:	Enabled
WS-Discovery Multicast:	Enabled
WS-Print:	Enabled
WS-Scan:	Enabled
Web Services	
Copy Submission:	Enabled
Digital Certificate Management and Securi...	Enabled
Extensible Service Registration:	Enabled
Job Limits:	Enabled
Job Management Extension:	Enabled
Device Configuration:	Enabled
Scan Submission:	Enabled
Scan Workflow Management:	Enabled
Session Data:	Enabled
User Interface Configuration:	Enabled
EIP Proxy Configuration:	Enabled
Xerox Secure Access:	Disabled
EIP SNMP Configuration:	Enabled
Print Submission:	Enabled
Scan Template Mgmt:	Enabled
Mass Storage Access:	Enabled
Card Reader Access:	Enabled
Authentication & Accounting Configur...	Enabled
Export Audit Log:	Enabled
Trellix Embedded Control:	Enabled

Apps

Printing

Banner Sheet:	Disabled
Sys/Start Job:	Disabled
Delete Held Jobs After:	3 Day(s) 0 Hour(s) 0 Minute(s)
Error Sheets:	Enabled
Paper Substitution:	Enabled
Tray Priority:	1,2,3,4,5
Default Copies:	1
Default Job Type:	Normal Print
Default Paper Size:	x=210mm, y=297mm
Default Paper Color:	White
Default 2 Sided Printing:	1 Sided
Default Output Tray:	Top Tray
Default Output Color:	Black & White
Default Collated Sets:	Enabled
Default Stapling:	Not Available
Offsetting Between Jobs:	Offset Between Jobs
PostScript	Installed
Level:	3
Version:	3021.101
Image Quality:	Standard
PCL	
Version:	6
Pitch Size:	10.00
Point Size:	12.00
Font Name:	Courier
Lines Per Page:	64
Custom Color Tables	Enabled
Label:	Not Installed
Embedded Fax:	not installed
Fax Line1:	
Fax Line2:	
Server Fax:	Enabled
Confirmation Sheet:	Errors Only
Delay Start:	Disabled
Repository Protocol:	FTP
Repository Server:	10.61.23.93:21
Repository Document Path:	/
Workflow Scanning:	Enabled
Confirmation Sheet:	Errors Only
Default Repository Protocol:	FTP
Default Repository Server:	10.61.23.93:21
Default Repository Document Path:	/
Default Repository Login Credentials:	Device
Alt1 Repository Protocol:	FTP
Alt1 Repository Server:	0.0.0.0:0
Alt1 Repository Document Path:	
Alt1 Repository Login Credentials:	Device
Workflow Pool Protocol:	FTP
Workflow Pool Server:	0.0.0.0:0
Workflow Pool Path:	
Email:	Enabled
Default From Address:	test@tls13.com
Confirmation Sheet:	Errors Only
Auto Send to Self:	Disabled
E-mail Security:	Disabled
Scan to Mailbox:	Disabled
View Mailboxes by Default:	Enabled
Storage Capacity (MB):	23489 MB
Storage Used (MB):	1319 MB
Cleanup of Public Folders:	Enabled
Cleanup of Created Folders:	Enabled
Cleanup Time:	Daily
Scan to Home:	Disabled
Friendly Name:	
Workflow Name:	
Auto Create Subdir:	Disabled
Append User Name to Path:	Disabled
Auto Create User Name Dir:	Disabled
Scan To:	Enabled
Cloud Services:	Disabled
Print From:	Enabled
Saved Jobs for Reprint:	Enabled
Print From USB:	Enabled
Print From MailBox:	Disabled
Cloud Services:	Disabled

Xerox® AltaLink® B8245/B8255/B8270
Multifunction Printer

Device app

The Device app provides access to supplies status, printer information, and settings. Some menus and settings require log in with the administrator name and password.

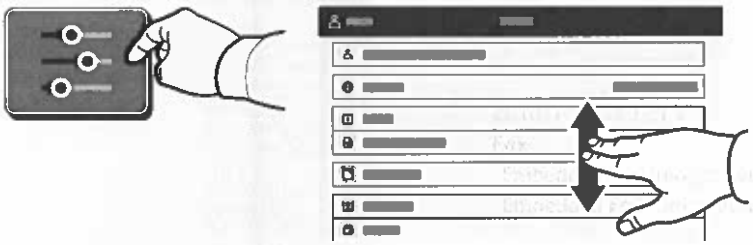

Billing and Usage Information

In the Device features menu, to view basic impression counts, touch **Billing/Usage**. To view detailed usage counts, touch **Usage Counters**. The list provides detailed impression count categories.

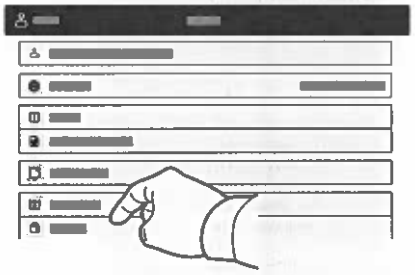

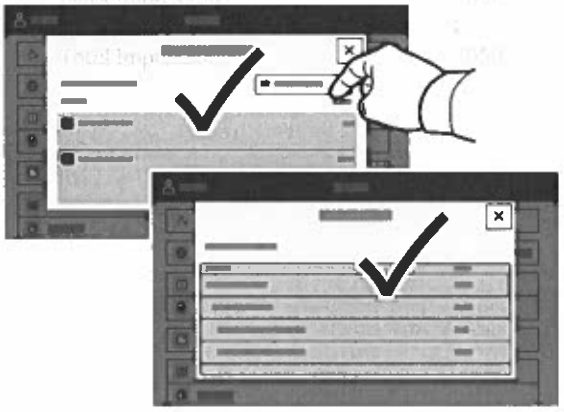

Xerox® AltaLink® B8245/B8255/B8270
Multifunction Printer

Printer Tour

Optional accessories can be part of your printer setup. For details, refer to the *User Guide*.

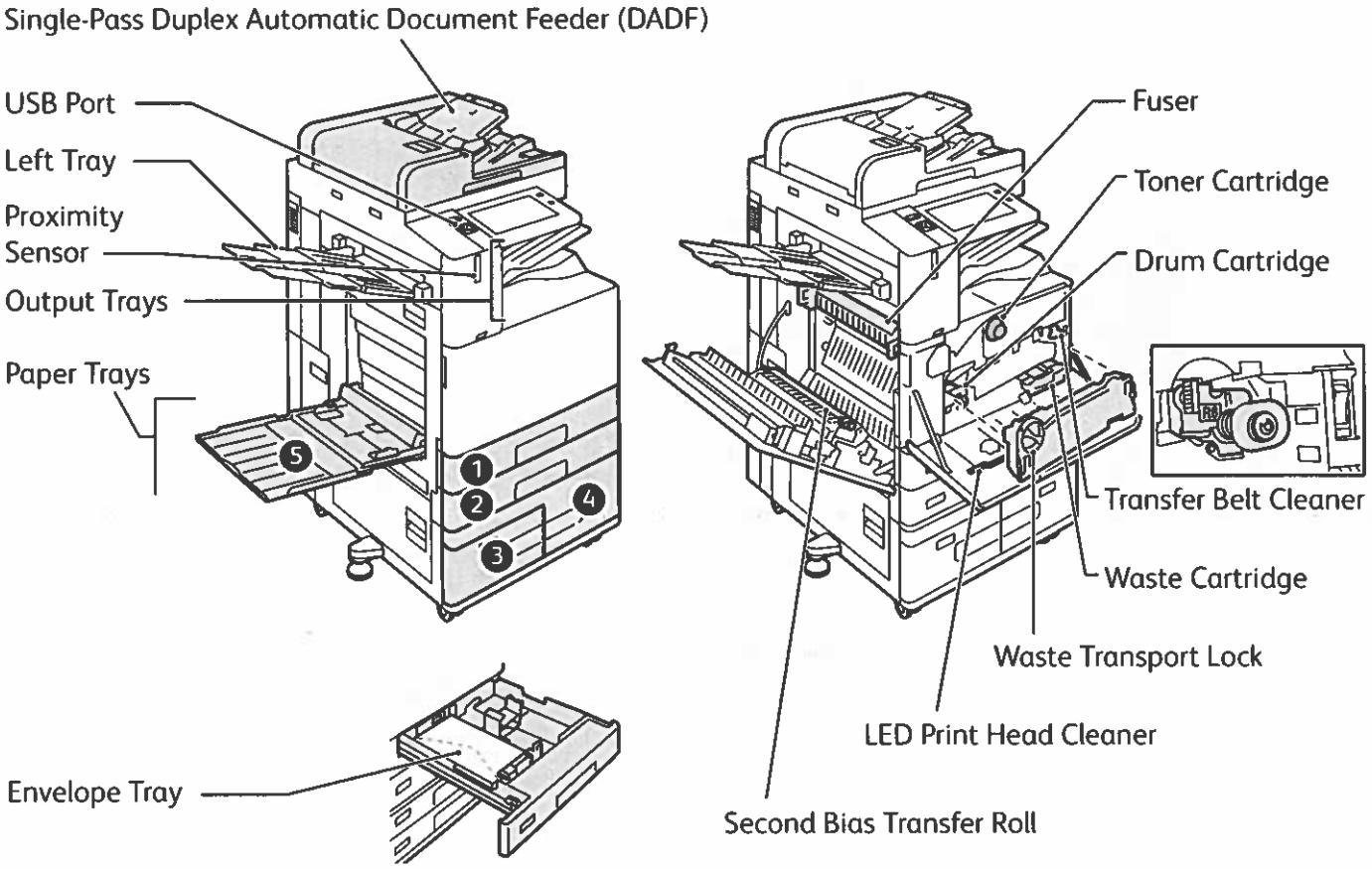

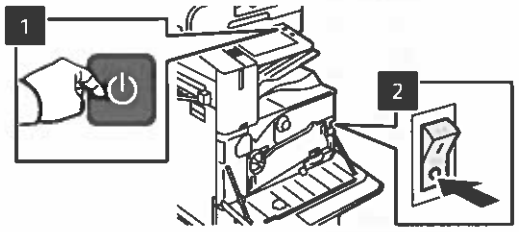

To restart the printer, on the control panel, press the **secondary power switch** (1).

For full printer power off, press the **secondary power switch** (1). Behind the front cover, press the **main power switch** (2).

To select sleep mode, press the **secondary power switch** (1). At the printer control panel touch screen, touch a selection.

Xerox® AltaLink® B8245/B8255/B8270
Multifunction Printer

Copying

For details, refer to the *User Guide*.

1

X: 85–432 mm (3.3–17 in.)
Y: 125–297 mm (4.9–11.7 in.)

38–128 g/m²
(26 lb. Text–34 lb. Bond)

≤130 (80 g/m², 20 lb. Bond)
B8270: ≤250

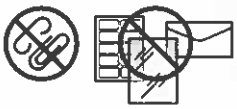

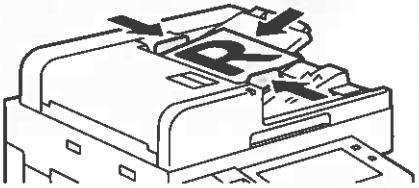

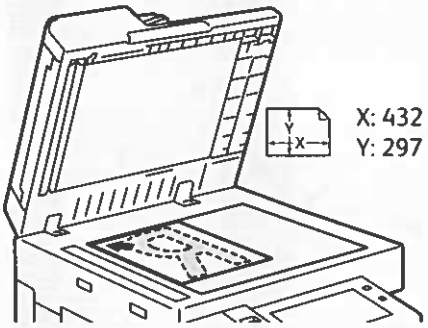

X: 432 mm (17 in.)
Y: 297 mm (11.7 in.)

Load the original documents.

2

Touch **Copy**, then and select the number of copies.

3

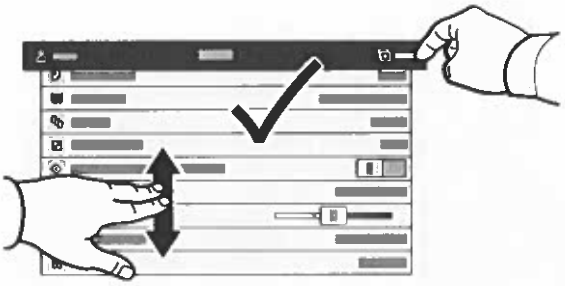

Select feature settings from the list, then touch **Start**.

Note: Settings from previous users remain onscreen for a short time. To restore the default settings in an app, scroll to the bottom of the feature list and touch **Reset**.

www.xerox.com/office/support

3

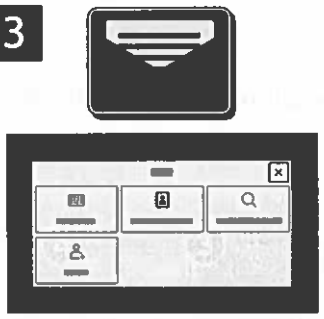

For Email, touch **Manual Entry**, type the email address using the touch screen keypad, then touch **Add**. To add more than one email address to the list, touch **Add Recipient**. To type a subject line for the email, touch **Subject**. To select saved email addresses, use the Device Address Book or select from Favorites.

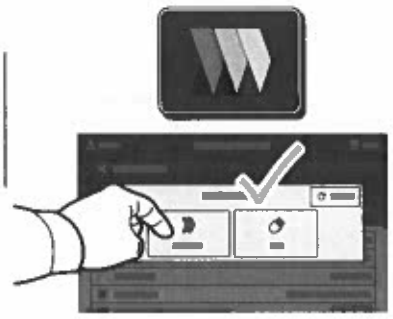

For Workflow Scanning, touch **Default Public Folder**, or insert your USB Flash Drive.

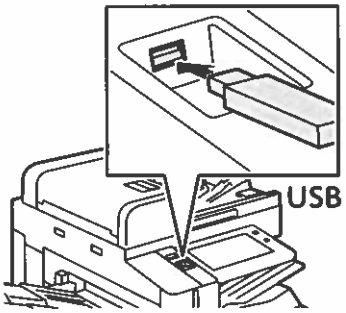

For Scan To, touch a destination type, then enter the appropriate information. To add more than one destination to the list, touch **Add Destination**.

4

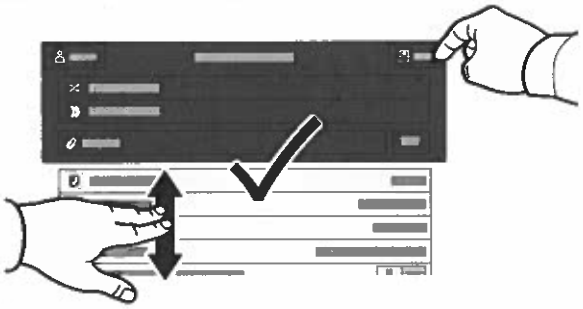

Change the settings as needed, then touch **Scan**, or for Email, touch **Send**.

Note: Settings from previous users remain onscreen for a short time. To restore the default settings in an app, scroll to the bottom of the feature list, then touch **Reset**.

4

Select the **Default Public Folder**, then find your scan in the list. To download the scan, click **Go**.

To refresh the list, click **Update View**.

To save the file to your computer, select **Download**.

To print the saved file again, select **Reprint**.

To permanently remove the stored job, select **Delete**.

To open a directory, select **Open**.

3

3.1

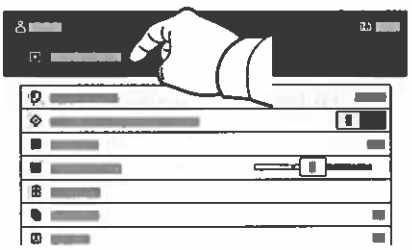

3.2

3.3

For fax numbers, touch **Manual Entry**, then enter the fax number using the touch screen alphanumeric keys and special characters. Touch **Add**. To add more fax numbers to the list, touch **Add Recipient**.

For Internet Fax email addresses, touch **Manual Entry**, then enter the email address using the touch screen keypad. Touch **Add**. To add more email addresses to the list, touch **Add Recipient**.

To select saved numbers, use the Device Address Book or Favorites. To select stored fax locations, use the Mailbox or Polling.

4

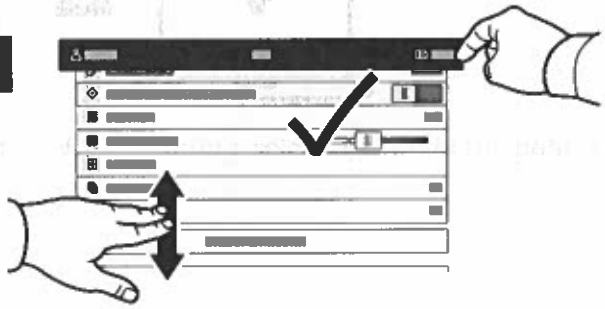

Note: Settings from previous users remain onscreen for a short time. To restore the default settings in an app, scroll to the bottom of the feature list, then touch **Reset**.

Change the settings as needed, then touch **Send**.

Xerox® AltaLink® B8245/B8255/B8270
Multifunction Printer

Printing Jobs Stored on the Printer

1

You can send a print job to save to the printer, then select the job from the printer control panel to print at a later time. Jobs can be saved in the public folder or be password protected. In the Xerox® printer driver, select **Properties** (Windows) or **Xerox Features** (Mac OS), then **Job Type**. Select **Saved Job** or **Secure Print**. For Secure Print, type a passcode. Click **OK** and print the job.

2

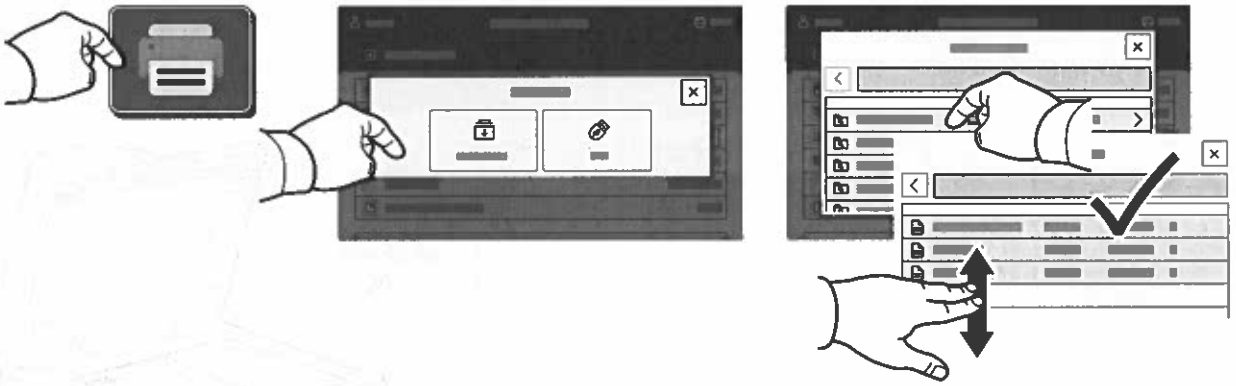

Touch **Print From** then touch **Saved Jobs**. Select the **Default Public Folder** then select your print job.

3

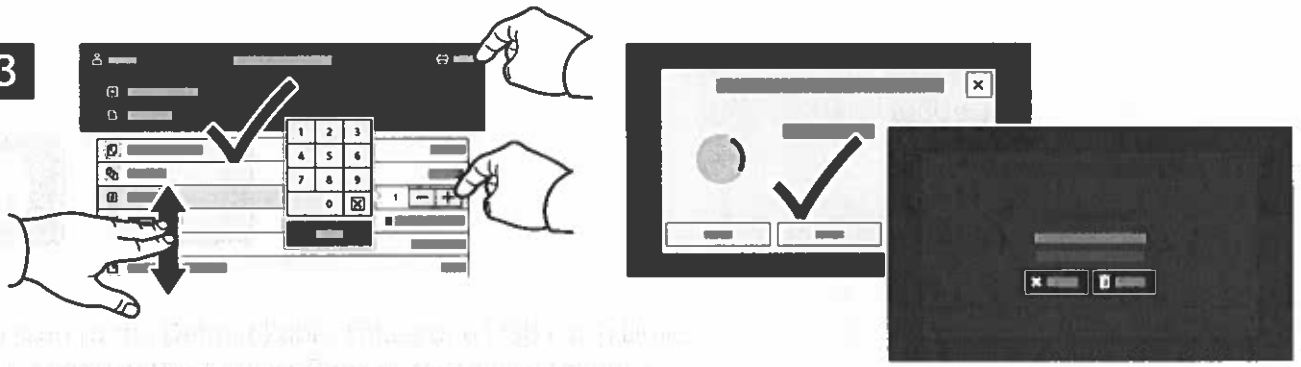

Select settings from the list. To select the number of copies, touch the plus sign (+) or the minus sign (-). For larger numbers, touch **Quantity** then enter a number. Touch Print. To delete the job, in the printing screen and confirmation screen, touch **Delete.**