Device app

The Device app provides access to supplies status, printer information, and settings. Some menus and settings require log in with the administrator name and password.

Billing and Usage Information

In the Device features menu, to view basic impression counts, touch **Billing/Usage**. To view detailed usage counts, touch **Usage Counters**. The list provides detailed impression count categories.

Xerox® AltaLink® C8230/C8235/C8245/C8255/C8270
Color Multifunction Printer

Printer Tour

Optional accessories can be part of your printer setup. For details, refer to the *User Guide*.

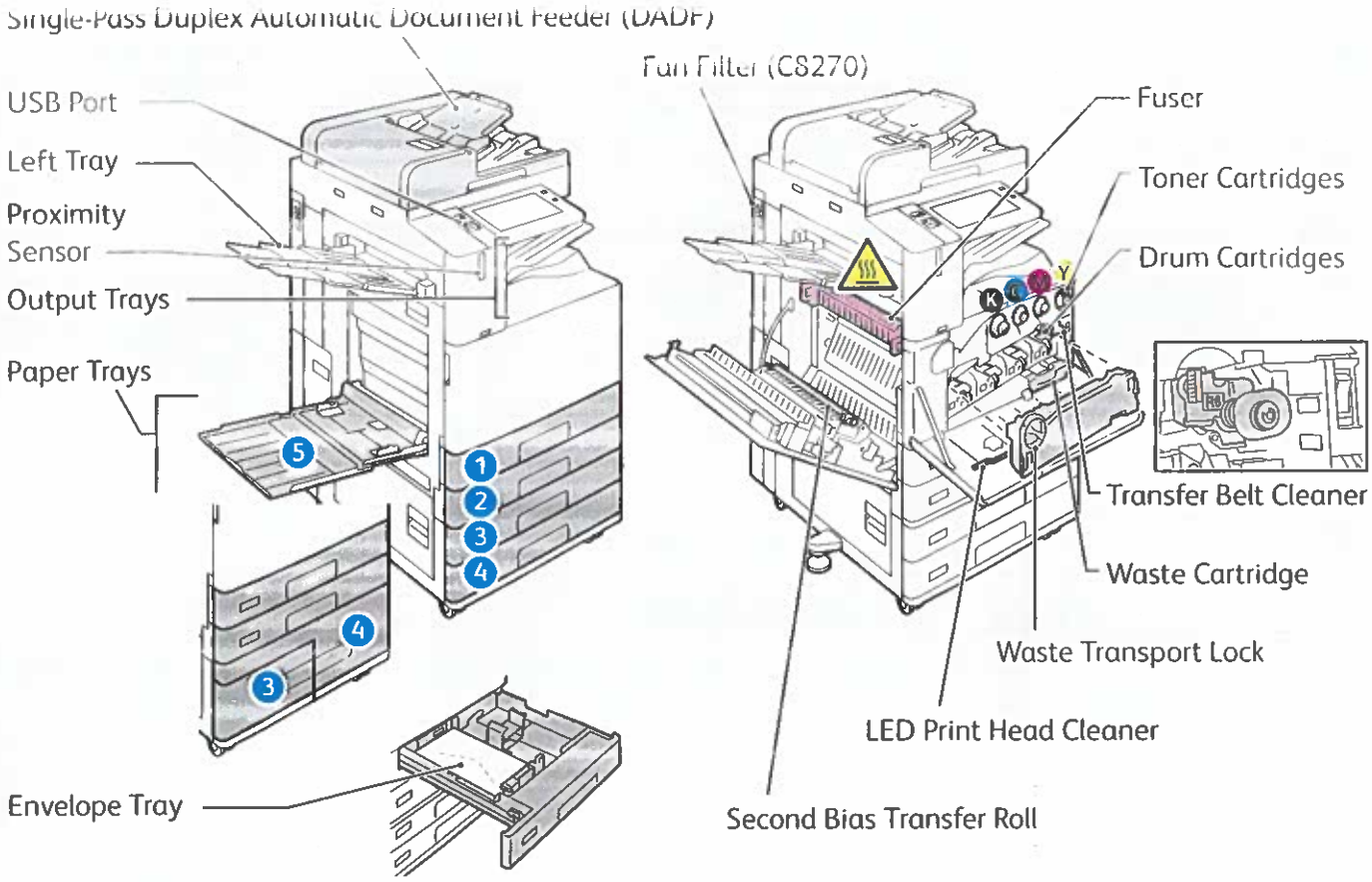

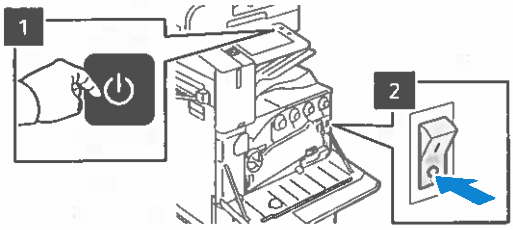

To restart the printer, on the control panel, press the **secondary power switch** (1).

For full printer power off, press the **secondary power switch** (1). Behind the front cover, press the **main power switch** (2).

To select sleep mode, press the **secondary power switch** (1). At the printer control panel touch screen, touch a selection.

Xerox® AltaLink® C8230/C8235/C8245/C8255/C8270
Color Multifunction Printer

Copying

For details, refer to the *User Guide*.

1

X: 85–432 mm (3.3–17 in.)
Y: 125–297 mm (4.9–11.7 in.)

38–128 g/m²
(26 lb. Text–34 lb. Bond)

≤130 (80 g/m², 20 lb. Bond)
C8270: ≤250

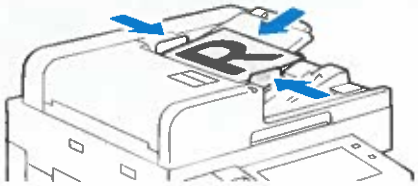

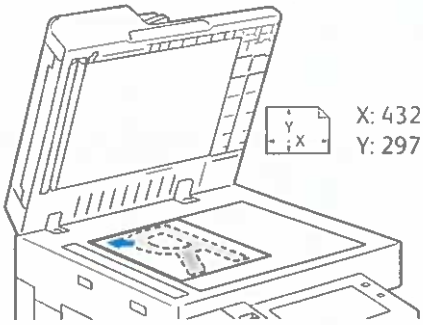

Load the original documents.

2

Touch **Copy**, then and select the number of copies.

3

Select feature settings from the list, then touch **Start**.

Note: Settings from previous users remain onscreen for a short time. To restore the default settings in an app, scroll to the bottom of the feature list and touch **Reset**.

3

For Email, touch **Manual Entry**, type the email address using the touch screen keypad, then touch **Add**. To add more than one email address to the list, touch **Add Recipient**. To type a subject line for the email, touch **Subject**. To select saved email addresses, use the Device Address Book or select from Favorites.

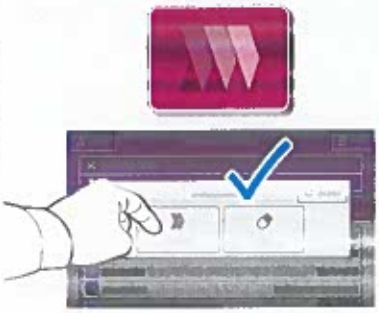

For Workflow Scanning, touch **Default Public Folder**, or insert your USB Flash Drive.

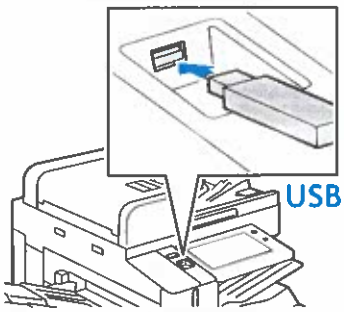

For Scan To, touch a destination type, then enter the appropriate information. To add more than one destination to the list, touch **Add Destination**.

4

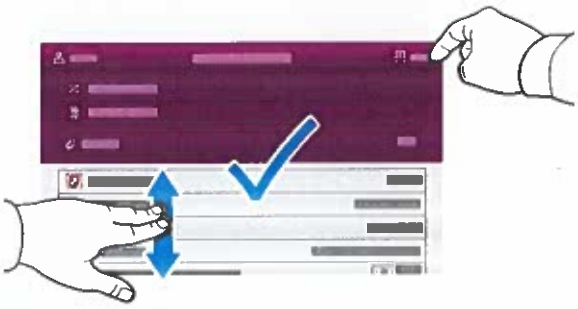

Change the settings as needed, then touch **Scan**, or for Email, touch **Send**.

Note: Settings from previous users remain onscreen for a short time. To restore the default settings in an app, scroll to the bottom of the feature list, then touch **Reset**.

4

Select the **Default Public Folder**, then find your scan in the list. To download the scan, click **Go**.

To refresh the list, click **Update View**.

To save the file to your computer, select **Download**.

To print the saved file again, select **Reprint**.

To permanently remove the stored job, select **Delete**.

To open a directory, select **Open**.

3

3.1

3.2

3.3

For fax numbers, touch **Manual Entry**, then enter the fax number using the touch screen alphanumeric keys and special characters. Touch **Add**. To add more fax numbers to the list, touch **Add Recipient**.

For Internet Fax email addresses, touch **Manual Entry**, then enter the email address using the touch screen keypad. Touch **Add**. To add more email addresses to the list, touch **Add Recipient**.

To select saved numbers, use the Device Address Book or Favorites. To select stored fax locations, use the Mailbox or Polling.

4

Note: Settings from previous users remain onscreen for a short time. To restore the default settings in an app, scroll to the bottom of the feature list, then touch **Reset**.

Change the settings as needed, then touch **Send**.

Xerox® AltaLink® C8230/C8235/C8245/C8255/C8270
Color Multifunction Printer

Printing Jobs Stored on the Printer

1

You can send a print job to save to the printer, then select the job from the printer control panel to print at a later time. Jobs can be saved in the public folder or be password protected. In the Xerox® printer driver, select **Properties** (Windows) or **Xerox Features** (Mac OS), then **Job Type**. Select **Saved Job** or **Secure Print**. For Secure Print, type a passcode. Click **OK** and print the job.

2

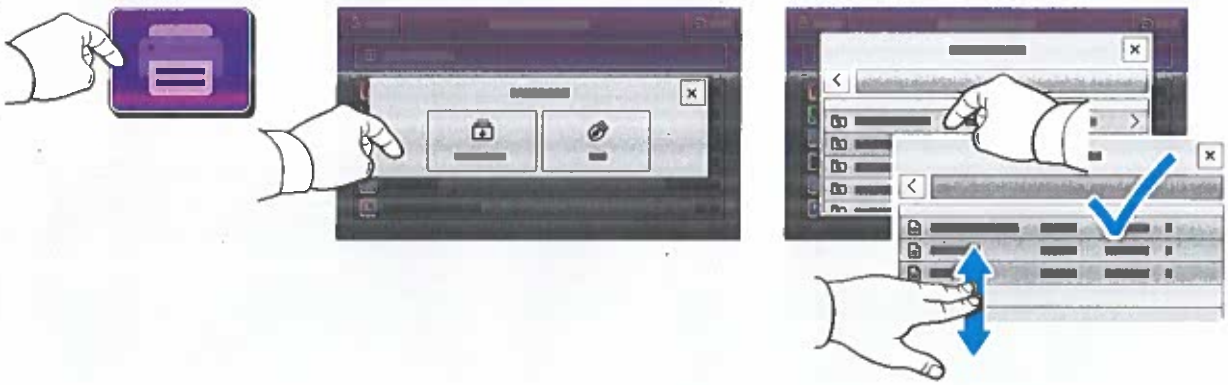

Touch **Print From** then touch **Saved Jobs**. Select the **Default Public Folder** then select your print job.

3

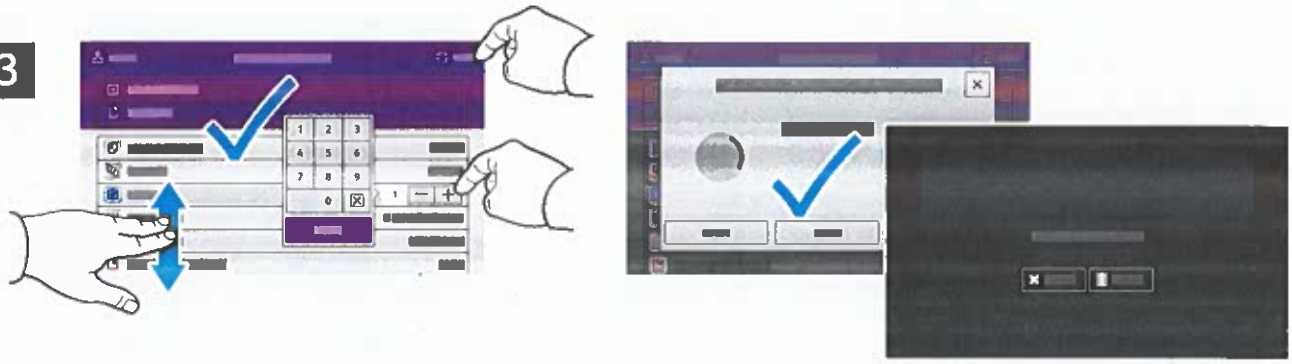

Select settings from the list. To select the number of copies, touch the plus sign (+) or the minus sign (-). For larger numbers, touch **Quantity** then enter a number. Touch Print. To delete the job, in the printing screen and confirmation screen, touch **Delete**.